OSLO

QUICK INSTALLATION GUIDE

Guide d'installation rapide

Kurzanleitung zur Installation

Guía rápida de instalación

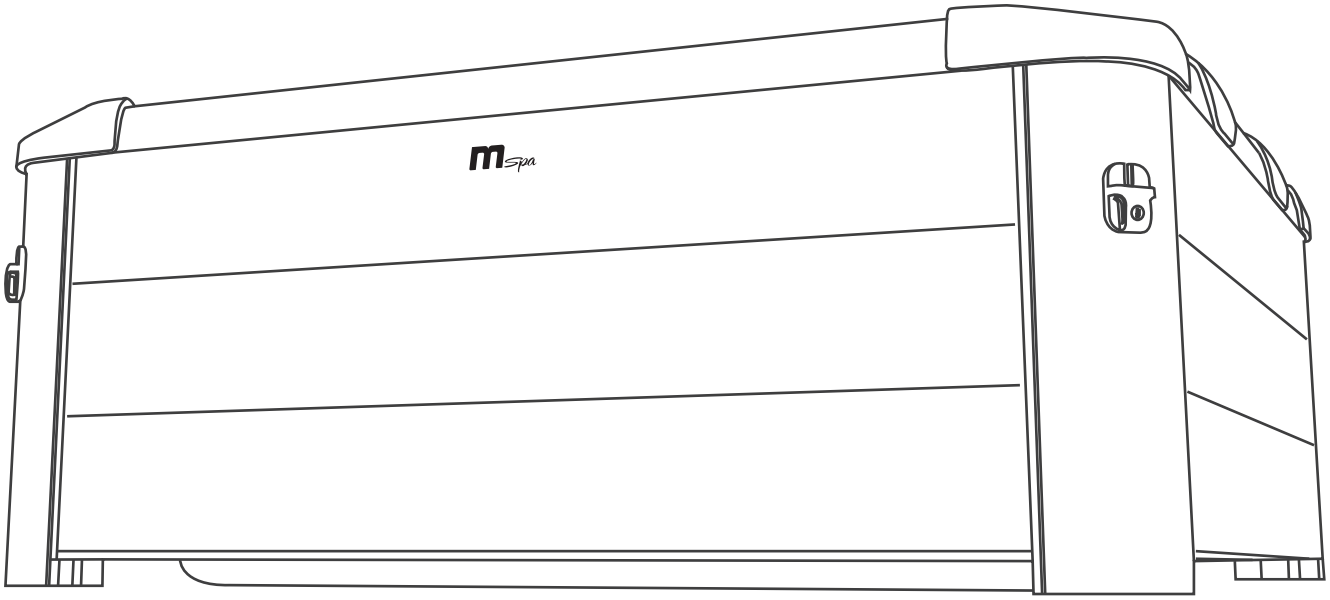

A11
A10
A9
A8
A7.1
A7.2
A7.3
A13
A6
A5
A12
B1
A1
A2
A3
A4

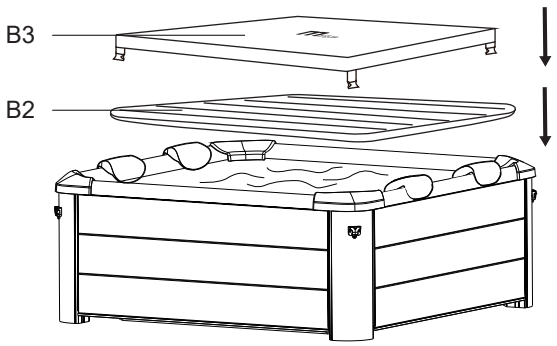

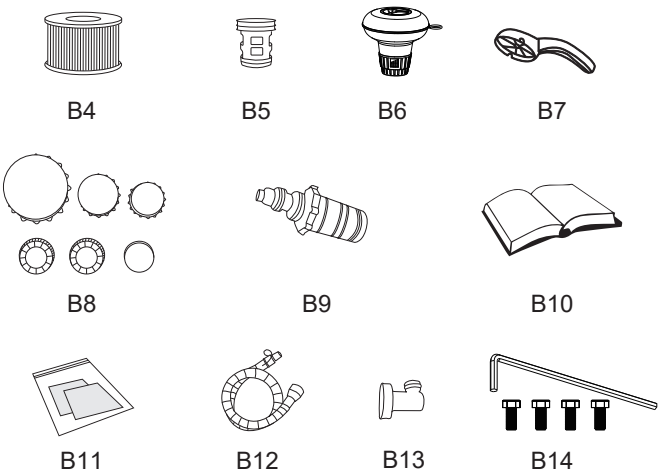

[FR]

N° DE REF	N° de l'article F-OS063W	F-OS063WP	F-SA063W	F-AM063W	Description	Qté	N° de carton
A1	B9301776	B9301833	B9301776	B9301990	Panneau à extrémité ouverte	1	3/4
A2	B9301933	B9301934	B9301933	B9301933	Joint inférieur avec ouverture de drainage	1	3/4
A3	B9301775	B9301832	B9301775	B9301989	Panneau en bois plastique	2	4/4
						1	3/4
A4	B9301933	B9301934	B9301933	B9301933	Joint d'étanchéité du fond	3	3/4
A5	B9301787	B9301787	B9301787	B9301991	Poutre de coin	4	3/4
A6	B9301864				Joint de panneau latéral	4	4/4
A7.1	B9302000	B9301979	B9301981	B9302000	Liner de spa	1	1/4
A7.2	B9301874	B9301877	B9301874	B9301874	Pipeline de spa	1	1/4
A7.3	B9301774	B9301825	B9301774	B9301774	Bande lumineuse LED	1	1/4
A8	B9301872	B9301900	B9301985	B9301872	Finition haut	4	3/4
A9	B9301865	B9301865	B9301984	B9301865	Joint décoratif supérieur	4	4/4
A10	B9301866	B9301866	B9301987	B9301866	Coussin d'angle souple	4	4/4
A11	B9301867	B9301867	B9301988	B9301867	Appui-tête	4	4/4
A12	B9301758(EU) B9301800(UK) B9301842(AU) B9301817(CB-50Hz) B9301957(CB-60Hz)				Boîtier de commande du jet	1	2/4
A13	B9301937				Couvercle du tube - 3 pièces	1	4/4
B1	B9301935	B9301936	B9301935	B9301935	Tapis pliable	1	1/4
B2	B9301779	B9301831	B9301779	B9301779	Vessie gonflable	1	1/4
B3	B9301767	B9301830	B9301767	B9301982	Couverture de spa à boucle	1	1/4
B4	B0303950 (B0303952 / B0303951)				Cartouche filtrante	2	1/4
B5	B0303960 (B9301402)				Socle de cartouche filtrante	1	1/4
B6	B93N01802				Distributeur de produits Chimiques pour comprimés de 1 pouce	1	1/4
B7	B9300419				Clé de serrage	1	1/4
B8	B9301938				Bouchons de conduits d'eau et d'air	1	1/4
B9	B9300670				Adaptateur de tuyau d'arrosage	1	1/4
B10	\				Manuel d'utilisation	1	1/4
B11	B9301913				Kit de réparation	1	1/4
B12	B9301311				Tuyau de gonflage	1	1/4
B13	B9301859				Adaptateur de gonflage	1	1/4
B14	B9301999 (B9301815)				vis*4+Clé en forme de L	1	

[DE]

Referenz-Nr.	Artikel Nr. F-OS063W	F-OS063WP	F-SA063W	F-AM063W	Beschreibung	Anz.	Karton Nr.
A1	B9301776	B9301833	B9301776	B9301990	Offenes Paneel	1	3/4
A2	B9301933	B9301934	B9301933	B9301933	Untere Dichtung mit Entwässerungsöffnung	1	3/4
A3	B9301775	B9301832	B9301775	B9301989	Holz-Kunststoffplatte	2	4/4
						1	3/4
A4	B9301933	B9301934	B9301933	B9301933	Untere Dichtung	3	3/4
A5	B9301787	B9301787	B9301787	B9301991	Eckbalken	4	3/4
A6	B9301864				Verbindung	4	4/4
A7.1	B9302000	B9301979	B9301981	B9302000	Spa-Liner	1	1/4
A7.2	B9301874	B9301877	B9301874	B9301874	Spa-pipeline	1	1/4
A7.3	B9301774	B9301825	B9301774	B9301774	LED-Lichtleiste	1	1/4
A8	B9301872	B9301900	B9301985	B9301872	Obere Zierleiste	4	3/4
A9	B9301865	B9301865	B9301984	B9301865	Verbindung obere Zierleiste	4	4/4
A10	B9301866	B9301866	B9301987	B9301866	Weiches Eckpolster	4	4/4
A11	B9301867	B9301867	B9301988	B9301867	Nacke nhörnchen	4	4/4
A12	B9301758(EU) B9301800(UK) B9301842(AU) B9301817(CB-50Hz) B9301957(CB-60Hz)				Wasserstrahl-Steuerkasten	1	2/4

Referenz-Nr.	Artikel Nr. F-OS063W	F-OS063WP	F-SA063W	F-AM063W	Beschreibung	Anz.	Karton Nr.
A13	B9301937				Rohrdeckel - 3 Stück	1	4/4
B1	B9301935	B9301936	B9301935	B9301935	Faltbare Matte	1	1/4
B2	B9301779	B9301831	B9301779	B9301779	Aufblasbare Thermoabdeckung	1	1/4
B3	B9301767	B9301830	B9301767	B9301982	Whirlpool-Abdeckung mit Schnalle	1	1/4
B4	B0303950 (B0303952 / B0303951)				Filterkartusche	2	1/4
B5	B0303960 (B9301402)				FIlterkartu schenboden	1	1/4
B6	B93N01802				Chemikalien dosierer für 2,5-cm	1	1/4
B7	B9300419				Schrauben schlüssel	1	1/4
B8	B9301938				Luft- und Wasserein/auslasskappe	1	1/4
B9	B9300670				Gartenschl auchadapter	1	1/4
B10	\				Benutzer handbuch	1	1/4
B11	B9301913				Reparatur-Set	1	1/4
B12	B9301311				Aufblassch lauch	1	1/4
B13	B9301859				Aufblasbarer Adapter	1	1/4
B14	B9301999 (B9301815)				4 x Schraube + L-Innensech kantschlüssel	1	

[ES]

Nº de referencia	Nº de artículo F-OS063W	F-OS063WP	F-SA063W	F-AM063W	Descripción	Cantidad	Nº de caja
A1	B9301776	B9301833	B9301776	B9301990	Panel abierto	1	3/4
A2	B9301933	B9301934	B9301933	B9301933	Junta inferior con canal de drenaje	1	3/4
A3	B9301775	B9301832	B9301775	B9301989	Panel de madera plástica	2	4/4
						1	3/4
A4	B9301933	B9301934	B9301933	B9301933	Sellado inferior	3	3/4
A5	B9301787	B9301787	B9301787	B9301991	Travesaño de esquina	4	3/4
A6	B9301864				Unión de paneles laterales	4	4/4
A7.1	B9302000	B9301979	B9301981	B9302000	Spa liner	1	1/4
A7.2	B9301874	B9301877	B9301874	B9301874	tubería de spa	1	1/4
A7.3	B9301774	B9301825	B9301774	B9301774	banda de luz LED	1	1/4
A8	B9301872	B9301900	B9301985	B9301872	Ribete superior	4	3/4
A9	B9301865	B9301865	B9301984	B9301865	Unión de ribetes superiores	4	4/4
A10	B9301866	B9301866	B9301987	B9301866	Amortiguación suave de esquina	4	4/4
A11	B9301867	B9301867	B9301988	B9301867	Reposaca bezas	4	4/4
A12	B9301758(EU) B9301800(UK) B9301842(AU) B9301817(CB-50Hz) B9301957(CB-60Hz)				Caja de control del chorro	1	2/4
A13	B9301937				Tapa embellecedora de tubo - 3 piezas	1	4/4
B1	B9301935	B9301936	B9301935	B9301935	Alfombrilla plegable	1	1/4
B2	B9301779	B9301831	B9301779	B9301779	Cámara inflable	1	1/4
B3	B9301767	B9301830	B9301767	B9301982	Cubierta del spa con hebillas	1	1/4
B4	B0303950 (B0303952 / B0303951)				Cartucho de filtro	2	1/4
B5	B0303960 (B9301402)				Base del cartucho de filtro	1	1/4
B6	B93N01802				Dispensador químico para tabletas de 1"	1	1/4
B7	B9300419				Llave inglesa	1	1/4
B8	B9301938				Tapones de canales de agua / aire	1	1/4
B9	B9300670				Adaptador de manguera de jardín	1	1/4
B10	\				Manual de usuario	1	1/4
B11	B9301913				Kit de reparación	1	1/4
B12	B9301311				Manguera de inflado	1	1/4
B13	B9301859				Adaptador de inflado	1	1/4
B14	B9301999 (B9301815)				Tornillo * 4 + Llave en forma de L	1	

[EN]

Reference No.	Item No. F-OS063W	F-OS063WP	F-SA063W	F-AM063W	Description	Qty	Carton No.
A1	B9301776	B9301833	B9301776	B9301990	Open-end panel	1	3/4
A2	B9301933	B9301934	B9301933	B9301933	Bottom seal with drainage opening	1	3/4
A3	B9301775	B9301832	B9301775	B9301989	Plastic wood panel	2	4/4
						1	3/4
A4	B9301933	B9301934	B9301933	B9301933	Bottom seal	3	3/4
A5	B9301787	B9301787	B9301787	B9301991	Corner beam	4	3/4
A6	B9301864				Side panel joint	4	4/4
A7.1	B9302000	B9301979	B9301981	B9302000	Spa liner	1	1/4
A7.2	B9301874	B9301877	B9301874	B9301874	Spa pipeline	1	1/4
A7.3	B9301774	B9301825	B9301774	B9301774	LED light strip	1	1/4
A8	B9301872	B9301900	B9301985	B9301872	Top trim	4	3/4
A9	B9301865	B9301865	B9301984	B9301865	Top trim joint	4	4/4
A10	B9301866	B9301866	B9301987	B9301866	Soft corner cushion	4	4/4
A11	B9301867	B9301867	B9301988	B9301867	Headrest	4	4/4
A12	B9301758(EU) B9301800(UK) B9301842(AU) B9301817(CB-50Hz) B9301957(CB-60Hz)				Jet control box	1	2/4
A13	B9301937				Tube trim cover – 3 pieces	1	4/4
B1	B9301935	B9301936	B9301935	B9301935	Foldable mat	1	1/4
B2	B9301779	B9301831	B9301779	B9301779	Inflatable bladder	1	1/4
B3	B9301767	B9301830	B9301767	B9301982	Buckle spa cover	1	1/4
B4	B0303950 (B0303952 / B0303951)				Filter cartridge	2	1/4
B5	B0303960 (B9301402)				Filter cartridge base	1	1/4
B6	B93N01802				Chemical dispenser for 1” tablets	1	1/4
B7	B9300419				Wrench	1	1/4
B8	B9301938				Water / air channel stoppers	1	1/4
B9	B9300670				Garden hose adaptor	1	1/4
B10	\				User manual	1	1/4
B11	B9301913				Repair kit	1	1/4
B12	B9301311				Inflation hose	1	1/4
B13	B9301859				Inflation adaptor	1	1/4
B14	B9301999 (B9301815)				Screw*4 + L-shape wrench		

SPA SETUP

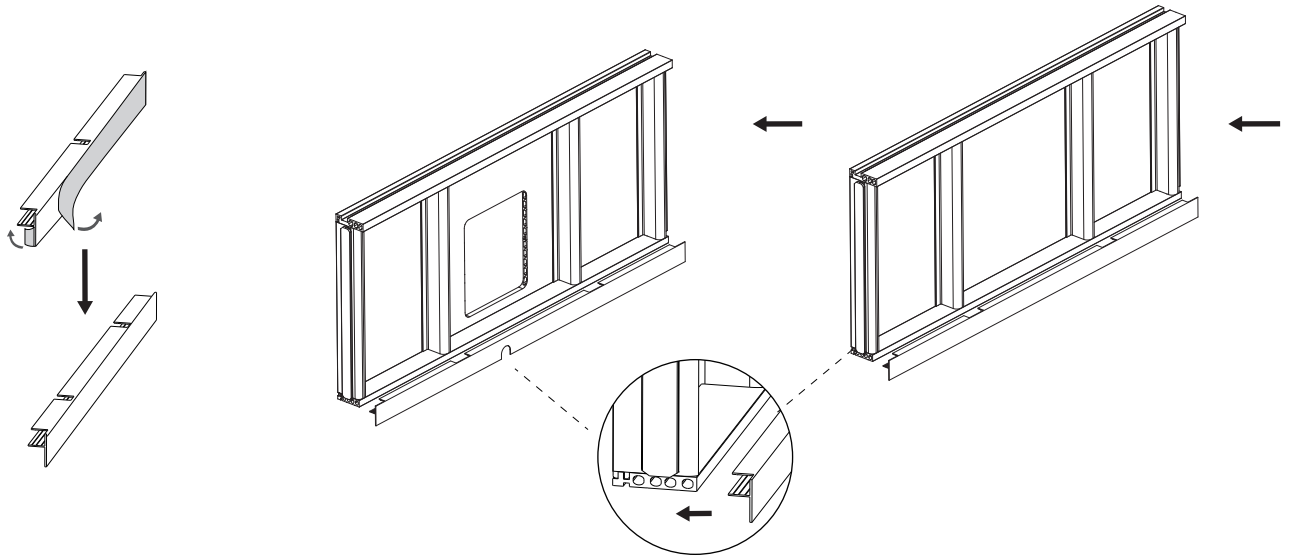

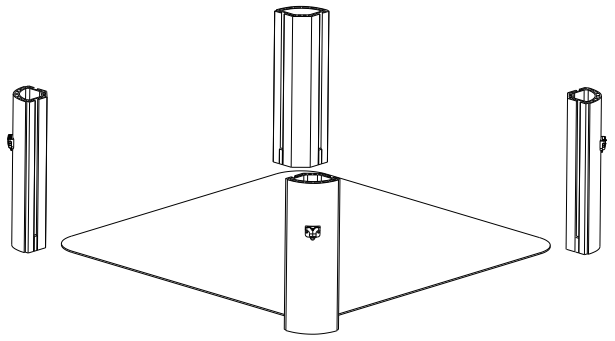

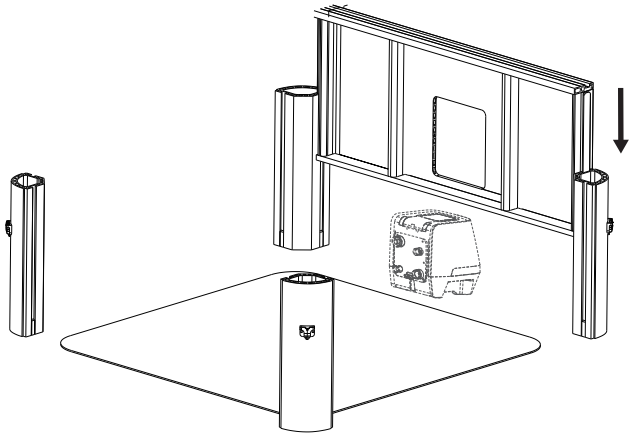

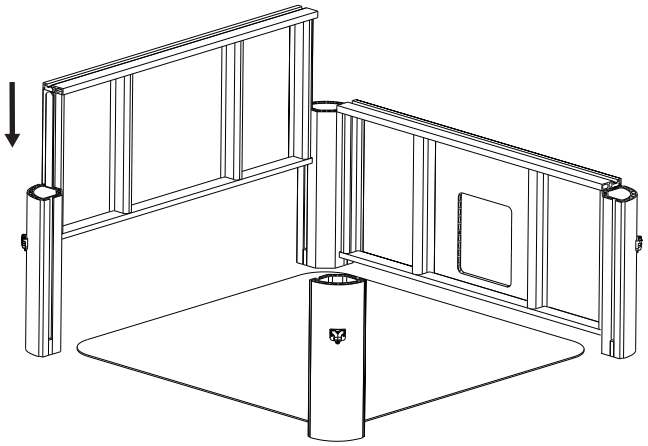

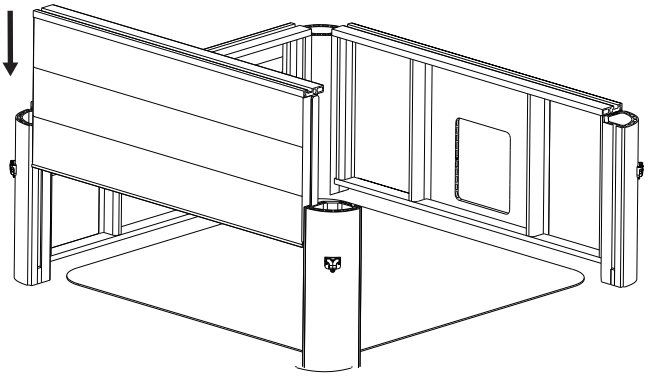

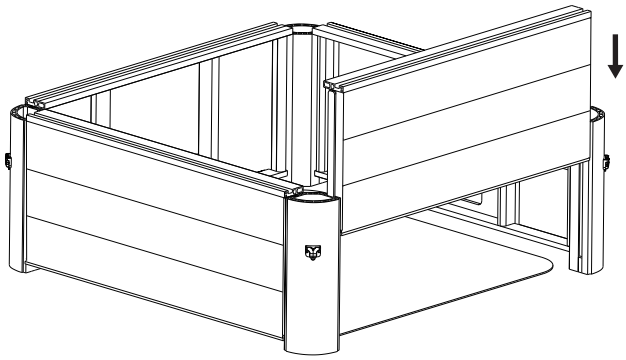

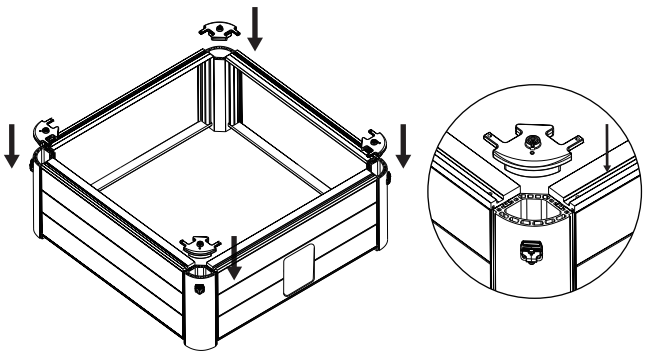

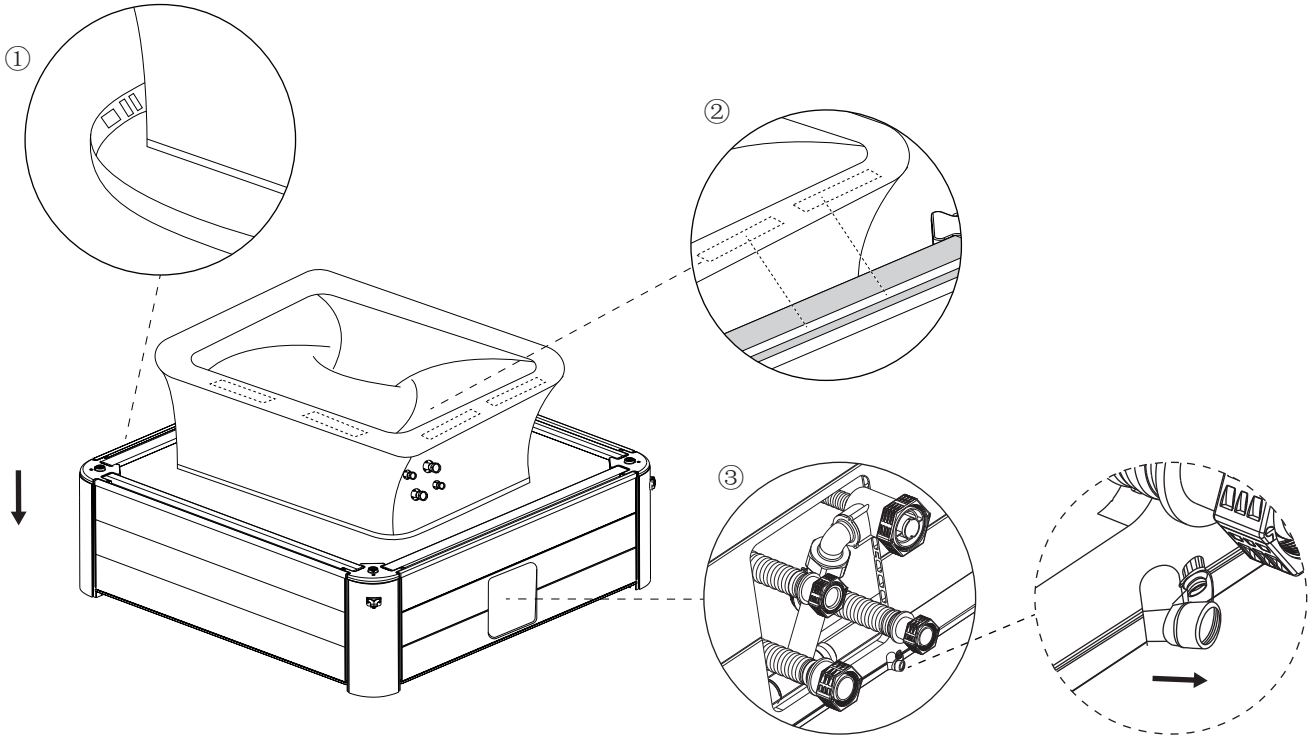
①
②
③

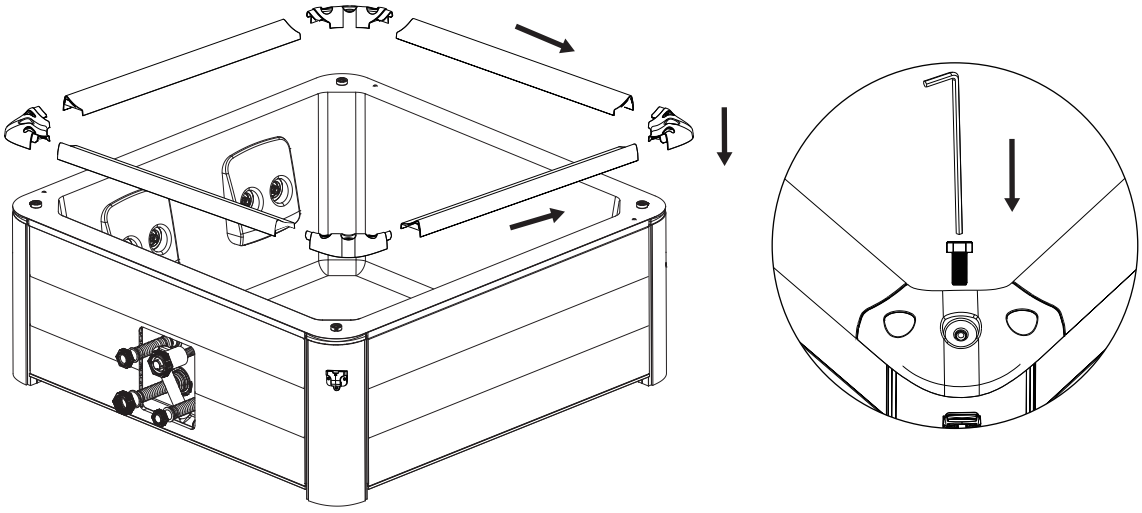

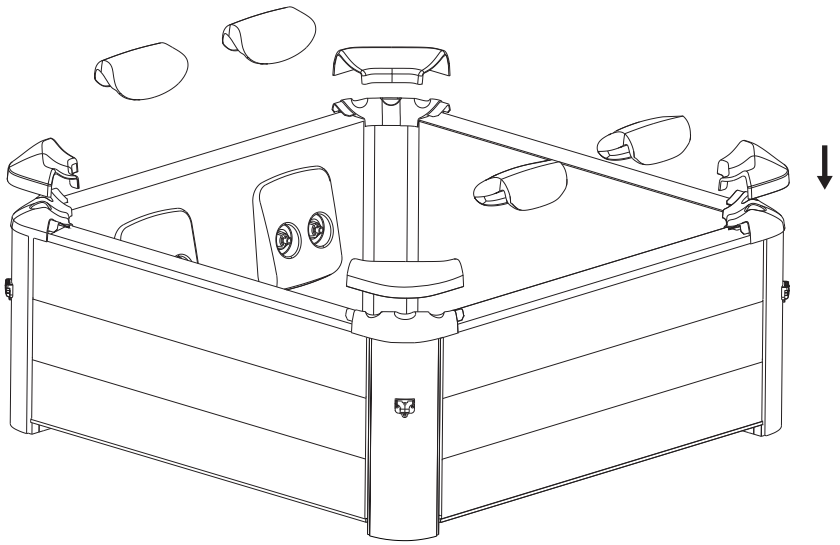

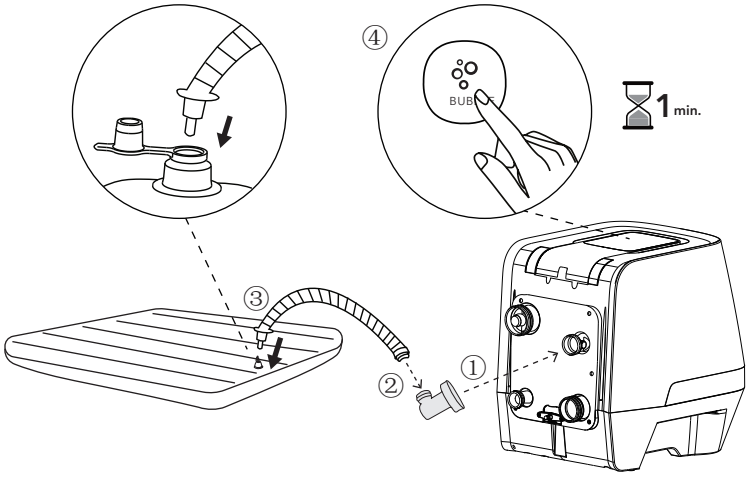

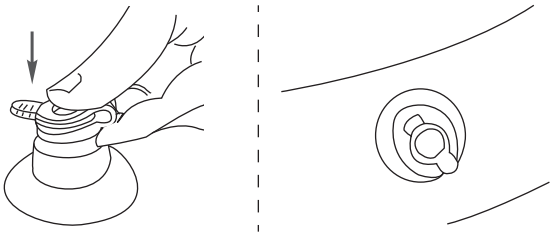

Long press the BUBBLE button for more than 3 seconds to stop inflation.

Appuyez longuement sur le bouton BUBBLE pendant plus de 3 secondes pour arrêter le gonflage.

Die BUBBLE-Taste für mehr als 3 Sek. gedrückt halten, um das Aufblasen zu stoppen.

Mantenga presionado el botón BURBUJAS por más de 3 segundos para detener el inflado.

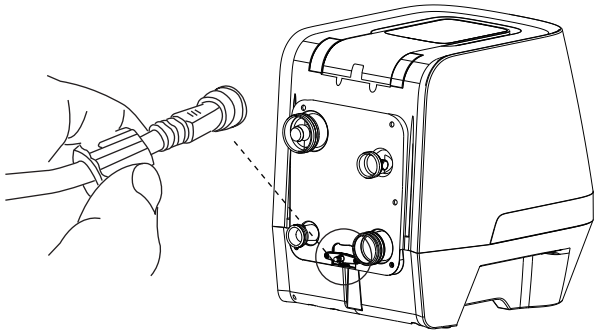

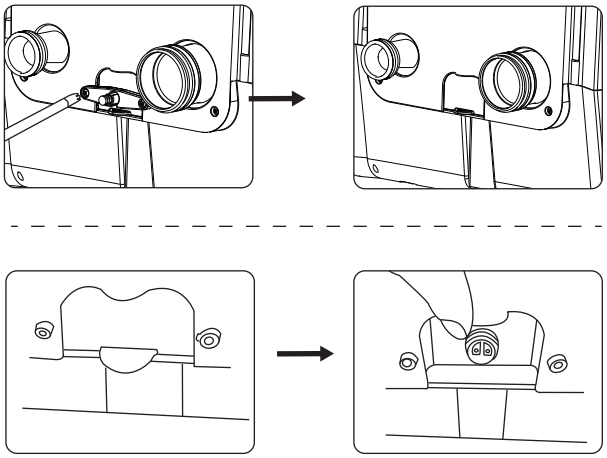

Connect the light strip cable to the control box.
Connectez le câble de la bande lumineuse au boîtier de commande.
Anschluss des LED-Strip-Kabels an den Steuerkasten.
Conecte el cable de la banda de luz al cuadro de mandos.

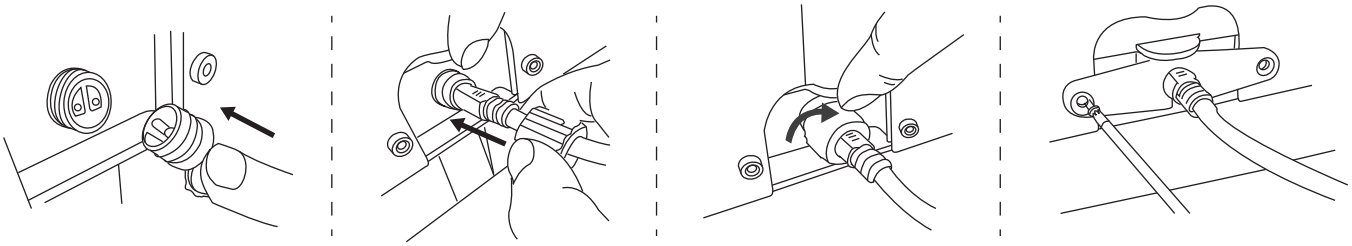

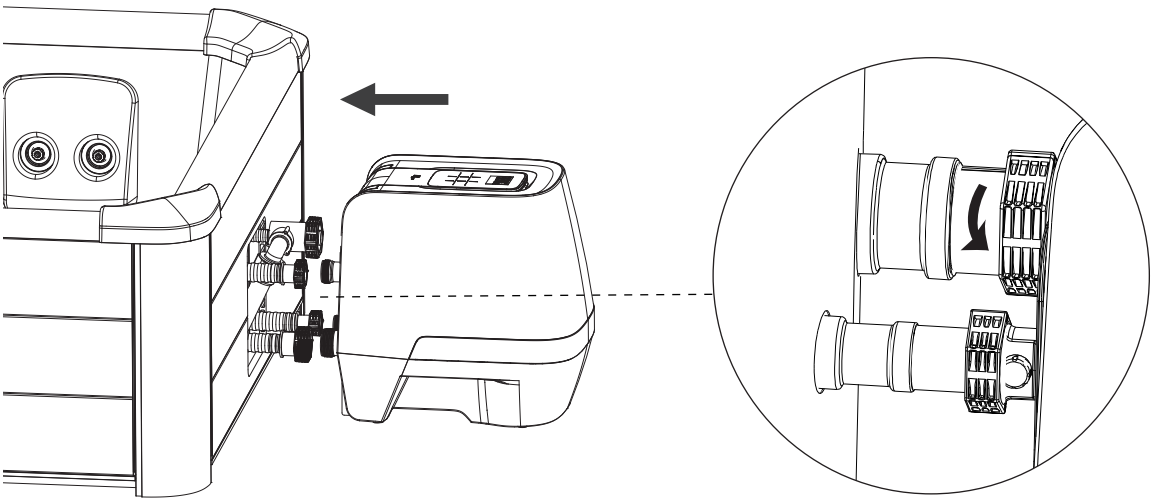

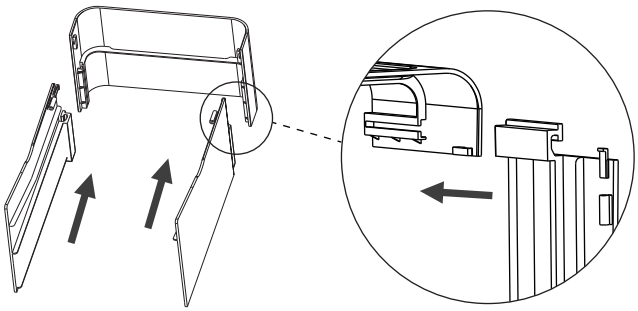

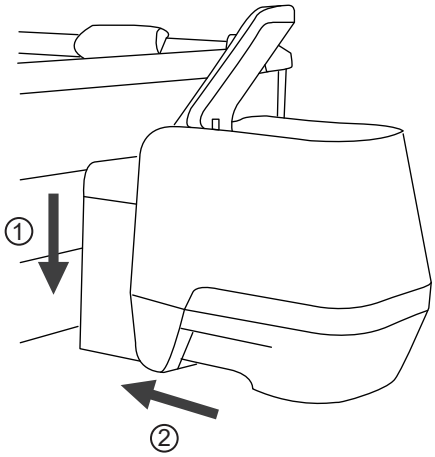
①
②

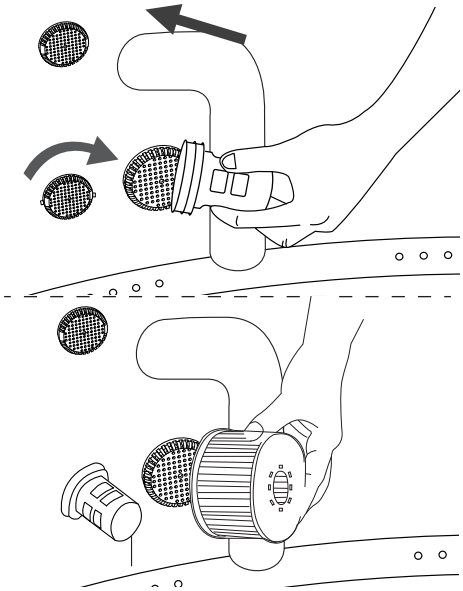

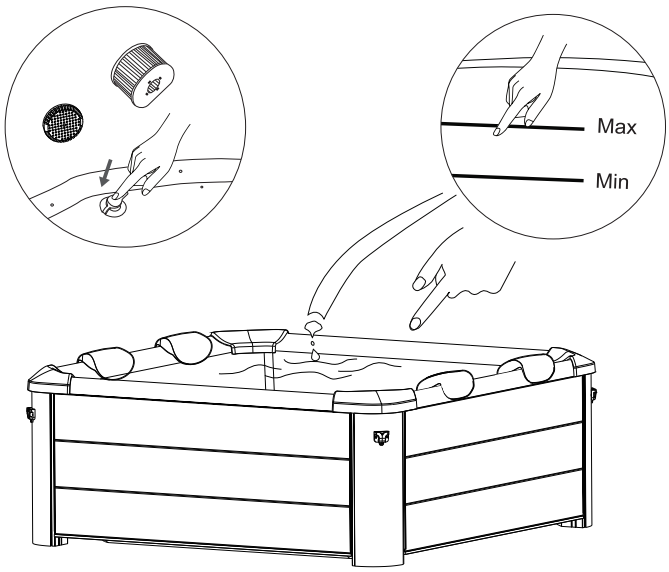
Max
Min